www.hd-hyundaice.com

HD HYUNDAI CONSTRUCTION EQUIPMENT

Head Office
11F, GLOBAL R&D CENTER, 477 BUNDANG SUSEO-RO, BUNDANG-GU, SEONGNAM-SI, GYEONGGI-DO, 13553, KOREA

PLEASE CONTACT

2024. AUG

HX27AZ

With Tier 4 final / Stage V Engine Installed

Engine Gross output (PS/kW)	Operating weight (Canopy/Cabin,kg/lbs)
HX27AZ : 25.2(18.5)	HX27AZ : 2,555(5,630) / 2,685(5,920)

HD HYUNDAI

WHAT'S NEWEST AND BEST

HX27AZ

THE BEST PRODUCTIVITY AND FUEL EFFICIENCY

- EU STAGE V / EPA Tier 4 Final Engine
- True Zero-tail
- Quick Coupler piping Option
- Boom swing function
- Double flange track roller
- 1way hydraulic piping for breakers
- 2way and 4way hydraulic piping for attachments Option

THE ULTIMATE SAFE ENVIRONMENT

- Emergency Engine Stop Switch
- Travel Alarm
- FOG Option
- LED Work Light & Beacon Lamp Option
- Dozer Safety Valve Option
- Anti-theft System

EASY CONTROL AND COMFORTABLE OPERATION

- Digital Cluster NEW
- Centralized Switch Console
- Proportional joysticks Option
- Proportional Auxiliary Hydraulic System Option
- Pattern Change Valve with Better Accesibility Option
- Improved Visibility
- Auto-Shift Travel Speed

SERVICEABILITY AND TELEMATICS

- Hi MATE NEW Option

NEW EXTERIOR DESIGN FOR ROBUSTNESS AND SAFETY

- ROPS / OPG Cabin/Canopy Option
- Standard Boom/Arm/Bucket Cylinder Guard NEW
- New Designed Attachment for Durability
- Optimized Hydraulic Layout

* Photo may include optional equipment.

EU STAGE V / EPA TIER 4 FINAL ENGINE

The new engine meets EU Stage V / EPA Tier 4 Final emission regulations without the need of special exhaust-aftertreatment, resulting in reduced maintenance costs for after-treatment devices.

THE BEST PRODUCTIVITY AND FUEL EFFICIENCY

The HX27AZ is equipped with eco-friendly, high-performance engines that meet the EU Stage V / EPA Tier 4 final emission requirements.

Quick Coupler piping Option

The HX27AZ mini excavators come with a factory-fitted hydraulic line, enabling the operation of any hydraulic quick coupler. This feature allows for quick and efficient tool changes without the operator needing to leave the cabin, improving productivity and convenience on the job site.

Boom swing function

The digging boom attached to the front frame can swing far to either side, thus increasing the machine reach. The front swing mechanism also allows working in difficult spaces (show image with boom swing angle to both sides)

Hydraulic piping for attachments

The standard 1-way hydraulic piping for breakers ensures efficient performance, while the optional 2-way and 4-way configurations provide excavator with versatile choices for customization, meeting the diverse demands of your projects.

Double flange track roller

Double flange track roller provided improved trackalignment, effectively preventing track derailment.

* Photo may include optional equipment.

NEW EXTERIOR DESIGN FOR ROBUSTNESS AND SAFETY

The true value of HX27AZ lies in its durability and high productivity.
The robust upper and lower frame structure can endure external shock and heavy work loads. Attachment performance has been proven through rigorous field testing. No matter how tough the working environment is, you can always rely on the HYUNDAI Excavator.

* Photo may include optional equipment.

"We make the best performance in rough working conditions without any unsureness with trustworthy HX27AZ"

The HX27AZ is equipment with eco-friendly,
high-performance engines that meet the EU Stage V emission requirement.
Become a true leader on the ground with the HX27AZ.

* ROPS Cabin and Canopy

The cabin structure of Hyundai HX27AZ is using integrally welded low-stress, high strength steel to meet ROPS and FOG certification.

- **ROPS :** Roll-Over Protective Structures ISO12117-2
- **OPG :** Operator Protective Guard, ISO10262 Option

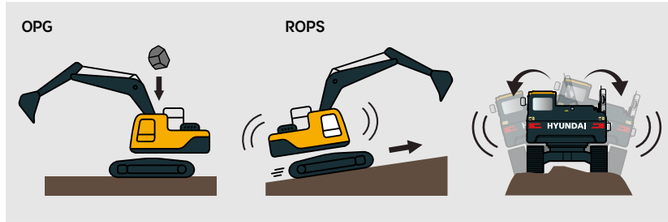

Standard Boom/Arm/Bucket Cylinder Guard NEW

We have added new cylinder guards to the boom, arm, and bucket of our excavator to provide increased protection for the hydraulic cylinders. These guards effectively shield the cylinders from damage caused by debris and other external factors, reducing the risk of downtime and costly repairs.

Improved Attachment Durability

Our upgraded attachments are designed to withstand the toughest work environments, featuring reinforced steel components and advanced welding techniques to ensure maximum strength and longevity.

Optimized Hydarulic Hose Layout

Our new boom design ensures enhanced safety, durability, and performance by protecting the hose from collisions and external elements, while providing increased versatility and a cleaner operator workspace.

* Photo may include optional equipment.

EASY CONTROL AND COMFORTABLE OPERATION

Introducing our new Spacious & Comfortable Cabin. The cabin has been designed with operator comfort and convenience in mind, with optimized ergonomics and advanced features that allow you to work with greater ease and efficiency. With its spacious interior and high-visibility design, our new cabin offers an unparalleled level of comfort and safety, ensuring that you can work for extended periods without fatigue or discomfort.

Digital Cluster

New 5 inch LCD cluster of HX27AZ mini excavators allows you to easily control excavator setting - like Aux. flow rate adustment. Our digital cluster also offers features for component lifecycle management and daily operation time management.

Centralized Switch Console

HX27AZ mini excavators's console features a centralized layout with intuitive switches and controls that allow you to easily and quickly access all critical functions and operations.

Proportional Auxiliary Hydraulic System Option

Proportional control switch with better speed control helps operators to enlarge the operation convenience whenever they do time-consuming work.

Pattern Change Valve Option

HX27AZ mini excavators now features a pattern change valve conveniently located below cabin rubberr pad, allowing for easy accessibility and operation.

Improved Visibility

Experience a whole new level of visibility with our latest cabin design. Our engineers have worked tirelessly to enhance the visibility from the cabin, providing you with a wider and more expansive field of view. The new design allows for better sightlines in all directions, giving you a clear and unobstructed view of your surroundings.

Auto-Shift Travel Speed

The auto shift travel speed feature on our excavator allows for seamless transitioning between high and low travel speeds, improving overall efficiency and productivity on the job site. This automated feature allows the operator to focus on the task at hand while the machine takes care of speed adjustments.

THE ULTIMATE SAFE ENVIRONMENT

The true value of HX A Series lies in its durability.
The robust frame structure and the attachments show the real value of HX A Series in tough working environments and promise higher productivity.

> "HX27AZ with advanced technology ensures our safety on a construction site."

Emergency Engine Stop Switch

With just a push of a button, the engine will immediately shut off, ensuring the safety of the operator and those around the machine.

Travel Alarm

The alarm emits a loud and distinct sound to notify nearby workers and pedestrians, reducing the risk of accidents and ensuring compliance with industry safety regulations.

Work light & Beacon lamp Option

The HX27AZ mini excavators are equipped with powerful LED worklights & beaconlamp that provide excellent visibility in low-light conditions, ensuring safe and efficient operation at any time of day or night.

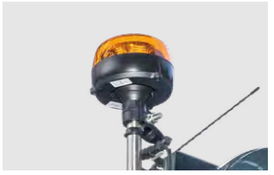

Dozer Safety Valves Option

The HX27AZ mini excavator is equipped with safety valve on dozer cylinder, which automatically activate in the event of hydraulic hose damage or loss of pressure to prevent sudden drops.

Anti-theft System Option

The system includes a password-protected ignition key to prevent the engine from starting without the correct key. Additionally, there is an optional GPS tracker (Hi MATE) available that allows you to quickly locate the machine in case of theft.

* Photo may include optional equipment.

SERVICEABILITY AND TELEMATICS

IoT / ICT / AI-based digital technology.
Creating a smart construction site. Maximizes connectivity, productivity, and safety for successful businesses.

* Photo may include optional equipment.

Hi MATE Option

IT'S CONVENIENT, EASY AND VALUABLE

Hi MATE, Hyundai's newly developed remote management system, utilizes GPS-satellite technology to provide customers with the highest level of service and product support available. Hi MATE enables users to remotely evaluate machine performance, access diagnostic information, and verify machine locations at the touch of a button.

WHAT IS BENEFITS

Increase Productivity

It helps you operate machines in efficient. You can check the difference between total engine hours and actual working hours. See how productive your machines are and plan any required cost saving solutions.
Hi MATE offers working information such as working / idling hours, fuel consumption and rate.

Convenient and Easy Monitoring

There is nothing much to do to monitor your machines. Just log on to the Hi MATE website or mobile application. Hi MATE allows you to watch your machines whenever and wherever you are.

Security

Protect your machines from theft or unauthorized usage with Hi MATE.
If the machine moves out of the Geo-fence boundary, you will get alerts.

Mobile Fleet App. Option

The new Mobile App is optimized to fleet management. It provides productivity, health insights based on telematics technology and enables fleet owner just focus on most wanted equipment in view of economical usage, utilization, fault codes and maintenance.
The new Mobile App sorts equipment in order of eco-index, utilization-index and fault code level automatically so that urgent equipment pops up automatically.

Hi MATE Fleet App

HCE-DT AIR App

HX27AZ

SPECIFICATIONS

Unit : mm (ft·in)

SPECIFICATIONS		
Model		HX27AZ
Operating weight	kg(lbs)	2,685 (5,920)
ENGINE		
Manufacturer		Kubota
Model		D1305
Type		Vertical, water cooled 4-cycle IDI diesel engine
Emission standard		Tier 4 Final / Stage V
Gross	PS(kW)/rpm	25.2(18.5)/2,400
Net	PS(kW)/rpm	24.7(18.2)/2,400
Peak torque	N·m(lb·ft)	81.3(60.0)
No. of cylinder		4
Bore x Stroke	mm(in.)	78(3.07") x 88(3.46")
Displacement	cc(in^2)	1,261 (77)
HYDRAULIC SYSTEM		
Pump type		Variable displacement tandem axis piston pumps
Max. pressure	kgf/cm^2(psi)	220(3,130)
Max. flow rate	l(gal)/min	2 x 28.2(7.4) + 20.0(5.3)
Aux. flow rate (2way)	l(gal)/min	48.0(12.7)
Fuel tank capacity	l(gal)	30.0(7.9)
Hydraulic capacity (tank)	l(gal)	27.0(7.1)
Bucket digging force (ISO)	kgf(lbf)	2,079(4,584)
Arm digging force (ISO)	kgf(lbf)	1,451(3,199)
Travel speed (high/low)	km(mile)/h	4.35(2.7) / 2.38(1.5)
Traction force	kg(lb)	2,266 (5,000)
Swing speed	rpm	9.16
Boom length	mm(ft-in)	2,120 (6' 11")
Arm length	mm(ft-in)	1,424 (4' 8") / 1,604 (5' 3")
Bucket capacity, std. SAE	m3(yd3)	0.07 (0.09)
Bucket width (with/without sidecutter)	mm(in.)	474 (18.7") / 432 (17.0")
Boom swing angle(LH/RH)	degree	75/50
Rubber track width	mm(ft.)	250(10")
Ground pressure	kgf/cm^2(psi)	0.32(4.55)
Noise level		
LpA / LwA (2000/14/EC)	dB	70 / 102

* All equipment dimension is based on standard boom/arm and counterweight.

HX27AZ

WORKING RANGE & DIMENSION

HX27AZ DIMENSIONS

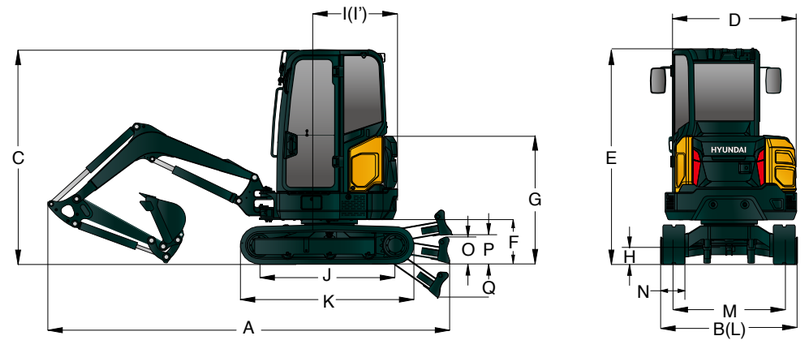

Unit : mm (ftin)

		HX27AZ
	Operating weight (Canopy/Cabin)	2,555(5,630) / 2,685(5,920)
A	Overall length	4,150 (13' 7")
B	Overall width	1,534 (5' 0")
	Overall width with Dozer	1,550 (5' 1")
C	Overall height	2,452 (8' 1")
D	Overall width of upperstructure	1,490 (4' 11")
E	Overall height of cab	2,452 (8' 1")
F	Ground clearance of counterweight	504 (1' 8")
G	Overall height of engine hood	1,522 (5' 0")
H	Minimum ground clearance	183 (0' 7")
I	Rear-end distance	775 (2' 7")
I'	Rear-end swing radius	775 (2' 7")
J	Distance between tumblers	1,550 (5' 1")
K	Undercarriage length (without grouser)	1,975 (6' 6")
L	Undercarriage width	1,500 (4' 11")
M	Track gauge	1,250 (4' 1")
N	Track shoe width, standard	250 (0' 10")
O	Height of blade	300 (1' 0")
P	Ground clearance of blade up	328 (1' 1")
Q	Depth of blade down	348 (1' 2")

* All equipment dimension is based on cabin, standard boom/arm and counterweight.

Unit : mm (ftin)

HX27AZ WORKING RANGE

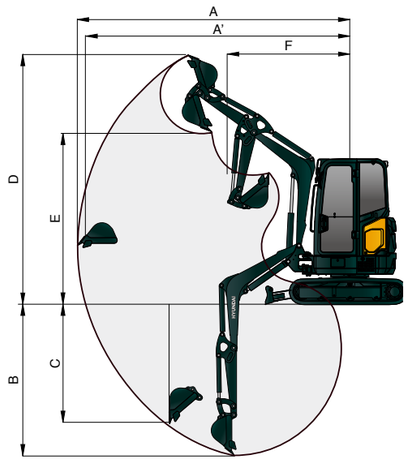

	momel	HX27AZ
A	Max. digging reach	3,910 (12' 10")
A'	Max. digging reach on ground	3,820 (12' 6")
B	Max. digging depth	2,240 (7' 4")
B'	Max. digging depth (8' level)	1,600 (5' 3")
C	Max. vertical wall digging depth	1,750 (5' 9")
D	Max. digging height	3,730 (12' 3")
E	Max. dumping height	2,670 (8' 9")
F	Min. swing radius	1,580 (5' 2")

HX27AZ

LIFTING CAPACITY

Rating over-front / Rating over-side or 360 degree

HX27AZ

Boom : 2.03 m (6′ 7″) / Arm : 1.12 m (3′ 7″) / Dozer blade down : 250mm(10″) rubber track

Lift-point height (m/ft)		Lift-point radius												At max. reach		
		1.0m (3.3ft)		1.5m (4.9ft)		2.0m (6.6ft)		2.5m (8.2ft)		3.0m (9.8ft)		3.5m (11.5ft)		Capacity		Reach
																m (ft)
3.5m	kg													*740	600	2.57
11.5ft	lb													*1630	1320	(8.4)
3.0m	kg									*690	470			*710	430	3.13
9.8ft	lb									*1520	1040			*1570	950	(10.3)
2.5m	kg									*680	470			*670	360	3.49
8.2ft	lb									*1500	1040			*1480	790	(11.4)
2.0m	kg							*810	610	*750	460	*720	350	*660	320	3.72
6.6ft	lb							*1790	1340	*1650	1010	*1590	770	*1460	710	(12.2)
1.5m	kg							*1020	590	*850	440	*760	350	*670	300	3.85
4.9ft	lb							*2250	1300	*1870	970	*1680	770	*1480	660	(12.6)
1.0m	kg							*1240	560	*960	430	*820	340	*710	290	3.89
3.3ft	lb							*2730	1230	*2120	950	*1810	750	*1570	640	(12.8)
0.5m	kg							*1390	540	*1050	410	*860	330	*770	290	3.85
1.6ft	lb							*3060	1190	*2310	900	*1900	730	*1700	640	(12.6)
0.0m	kg					*1590	750	*1440	530	*1090	410	*880	330	*800	300	3.72
0.0ft	lb					*3510	1650	*3170	1170	*2400	900	*1940	730	*1760	660	(12.2)
-0.5m	kg	*1190	*1190	*1420	1260	*1930	750	*1400	530	*1070	400			*820	330	3.50
-1.6ft	lb	*2620	*2620	*3130	2780	*4250	1650	*3090	1170	*2360	880			*1810	730	(11.5)
-1.0m	kg	*1750	*1750	*2170	1270	*1690	760	*1250	530	*930	410			*840	380	3.14
-3.3ft	lb	*3860	*3860	*4780	2800	*3730	1680	*2760	1170	*2050	900			*1850	840	(10.3)
-1.5m				*1810	1300	*1270	770	*900	550					*830	520	2.59
-4.9ft				*3990	2870	*2800	1700	*1980	1210					*1830	1150	(8.5)

HX27AZ

Boom : 2.03 m (6′ 7″) / Arm : 1.12 m (3′ 7″) / Dozer blade down : 300mm(12″) rubber track

Lift-point height (m/ft)		Lift-point radius												At max. reach		
		1.0m (3.3ft)		1.5m (4.9ft)		2.0m (6.6ft)		2.5m (8.2ft)		3.0m (9.8ft)		3.5m (11.5ft)		Capacity		Reach
																m (ft)
3.5m	kg													*740	700	2.57
11.5ft	lb													*1630	1540	(8.4)
3.0m	kg									*690	550			*710	510	3.13
9.8ft	lb									*1520	1210			*1570	1120	(10.3)
2.5m	kg									*680	550			*670	420	3.49
8.2ft	lb									*1500	1210			*1480	930	(11.4)
2.0m	kg							*810	720	*750	540	*720	420	*660	380	3.72
6.6ft	lb							*1790	1590	*1650	1190	*1590	930	*1460	840	(12.2)
1.5m	kg							*1020	690	*850	520	*760	410	*670	360	3.85
4.9ft	lb							*2250	1520	*1870	1150	*1680	900	*1480	790	(12.6)
1.0m	kg							*1240	660	*960	510	*820	400	*710	340	3.89
3.3ft	lb							*2730	1460	*2120	1120	*1810	880	*1570	750	(12.8)
0.5m	kg							*1390	640	*1050	490	*860	400	*770	350	3.85
1.6ft	lb							*3060	1410	*2310	1080	*1900	880	*1700	770	(12.6)
0.0m	kg					*1590	890	*1440	630	*1090	490	*880	390	*800	360	3.72
0.0ft	lb					*3510	1960	*3170	1390	*2400	1080	*1940	860	*1760	790	(12.2)
-0.5m	kg	*1190	*1190	*1420	*1420	*1930	890	*1400	630	*1070	480			*820	390	3.50
-1.6ft	lb	*2620	*2620	*3130	*3130	*4250	1960	*3090	1390	*2360	1060			*1810	860	(11.5)
-1.0m	kg	*1750	*1750	*2170	1500	*1690	900	*1250	630	*930	490			*840	460	3.14
-3.3ft	lb	*3860	*3860	*4780	3310	*3730	1980	*2760	1390	*2050	1080			*1850	1010	(10.3)
-1.5m	kg			*1810	1530	*1270	920	*900	650					*830	620	2.59
-4.9ft	lb			*3990	3370	*2800	2030	*1980	1430					*1830	1370	(8.5)

| 1 | Lifting capacity are based on ISO 10567.
| 2 | Lifting capacity of the HX Series does not exceed 75% of tipping load with the machine on firm, level ground or 87% of full hydraulic capacity.
| 3 | The Lift-point is bucket pivot mounting pin on the arm(without bucket mass).
| 4 | (*) indicates load limited by hydraulic capacity.

Unit : mm (ft/in)

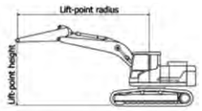

HX27AZ

STANDARD / OPTION

● : Standard / ○ : Option

ENGINE	HX27AZ
Mechanical controlled Kubota engine	●
Double-element air filter	●
Water seperator with filter	●
HYDRAULIC SYSTEM	**HX27AZ**
Open center hydraulic system	●
Two-speed travel with auto-shift	●
Pressure accumulator	●
Proportional Aux. control	○
1 way Aux. hydraulic line for breaker	●
2 way Aux. hydraulic line for grapple	○
4 way Aux. hydraulic line for rotating	○
Pattern change valve	○
CABIN & CANOPY	**HX27AZ**
Canopy	●
Cabin with heater	○
ROPS (Roll-over Protective structure, ISO3471)	●
OPG (Operator Protective Guard) Level 1	○
FOG Guard	○
Adjustable Mechanical Suspension Seat	●
Travel levers with foot pedals	●
Emergency hammer for exit (Cabin)	●
Power-assisted front window (Cabin)	●
Travel alarm	●
LED beacon lamp	○
5" Digital cluster with IP68 water & dust proof	●
Radio with USB	●
12V power socket	●
Side & Rear Mirrors	●
Cup holder	●
Horn	●
WORKING EQUIPMENT	**HX27AZ**
Zero-tail Reduced	●
Boom swing function	●
Arm with thumb bracket	○
Factory fit thumb	○
Hyundai quick coupler	○
Quick coupler piping	○
Safety valves for Dozer	○
Travel & Swing motor with dics brake	●
1 halogen work light on boom	○
1 LED work light on boom	●
2 LED work lights on cabin	○

UNDERCARRIAGE	HX27AZ
Rubber track	●
Steel track	○
Hi MATE	○

* Standard and optional equipment may vary. Contact your Hyundai dealer for more information. The machine may vary according to International standards.
* The photos may include attachments and optional equipment that are not available in your area.
* Materials and specifications are subject to change without advance notice.
* All imperial measurements rounded off to the nearest pound or inch.

MEMO