ENGINE	STD	OPT
Cummins QSB 6.7 engine	●	
HYDRAULIC SYSTEM		
Intelligent Power Control (IPC)		
3-power mode, 2-work mode, user mode	●	
Variable Power Control	●	
Pump Flow Control	●	
Attachment Mode Flow Control		●
Engine Auto Idle	●	
Engine Auto Shutdown Control		●
Electronic Fan Control	●	
CAB & INTERIOR		
ISO Standard cabin		
Rise-up type windshield wiper	●	
Radio / USB player	●	
Handsfree mobile phone system with USB	●	
12 volt power outlet (24V DC to 12V DC converter)	●	
Electric horn	●	
All-weather steel cab with 360° visibility	●	
Safety glass windows	●	
Sliding fold-in front window	●	
Sliding side window(LH)	●	
Lockable door	●	
Hot & cool box	●	
Storage compartment & Ashtray	●	
Transparent cabin roof-cover	●	
Sun visor	●	
Door and cab locks, one key	●	
Mechanical suspension seat with heater	●	
Pilot-operated slidable joystick	●	
Console box height adjust system	●	
Automatic climate control		
Air conditioner & heater	●	
Defroster	●	
Starting Aid (air grid heater) for cold weather	●	
Centralized monitoring		
8" LCD display	●	
Engine speed or Trip meter/Accel.	●	
Engine coolant temperature gauge	●	
Max power	●	
Low speed/High speed	●	
Auto idle	●	
Overload	●	
Check Engine	●	
Air cleaner clogging	●	
Indicators	●	
ECO Gauges	●	
Fuel level gauge	●	
Hyd. oil temperature gauge	●	
Fuel warmer	●	
Warnings	●	
Communication error	●	
Low battery	●	
Clock	●	
Cabin lights		●
Cabin front window rain guard		●
Cabin roof-steel cover		●
Seat		
Adjustable air suspension seat with heater		●
Cabin FOPS (ISO 10262) Level 2		
FOPS (Falling Object Protective Structure) · ISO 10262 Level 2		●
Cabin ROPS (ISO 12117-2)		
ROPS (Roll Over Protective Structure)	●	

SAFETY	STD	OPT
Battery master switch	●	
Rearview camera		●
Four front working lights (2 boom mounted, 2 front frame mounted)	●	
Travel alarm		●
Rear work lamp		●
Beacon lamp		●
Automatic swing brake	●	
Boom holding system	●	
Arm holding system	●	
Safety lock valve for boom cylinder with overload warning device		●
Safety lock valve for arm cylinder		●
Swing Lock System		●
Two outside rearview mirror	●	
OTHER		
Booms		
5.68 m mono, 18' 8"	●	
5.65 m 2-piece, 18' 6"		
Arms		
2.0 m, 6' 7"		●
2.4 m, 7' 10"		●
2.92 m, 9' 7"	●	
Removable clean-out dust net for cooler	●	
Removable reservoir tank	●	
Fuel pre-filter	●	
Fuel warmer (Single)	●	
Fuel warmer (Dual)		●
Self-diagnostics system	●	
Hi-mate (Remote Management System)		●
Batteries (2 x 12V x 100 AH)	●	
Fuel filler pump (50 L/min)		●
Single-acting piping kit (breaker, etc.)		●
Double-acting piping kit (clamshell, etc.)		●
Rotating Piping Kit		●
Quick coupler piping		●
Quick coupler		●
One Pedal Straight Travel System		●
Accumulator for lowering work equipment	●	
Pattern change valve (2 patterns)		●
Fine Swing Control System		●
Tool kit		●
UNDERCARRIAGE		
Lower frame under cover (Additional)		●
Lower frame under cover (Normal)	●	
Track shoes		
Triple grousers shoes (600mm, 24")	●	
Triple grousers shoe (700 mm, 28")		●
Triple grousers shoe (800 mm, 32")		●
Triple grousers shoe (900 mm, 36")		●
Track rail guard	●	

* Standard and optional equipment may vary. Contact your Hyundai dealer for more information. The machine may vary according to International standards.
* The photos may include attachments and optional equipment that are not available in your area.
* Materials and specifications are subject to change without advance notice.
* All imperial measurements rounded off to the nearest pound or inch.

HYUNDAI CONSTRUCTION EQUIPMENT

Head Office (Sales office)

First tower, 55, Bundang-ro, Bundang-gu, Seongnam-si, Gyeonggi-do, Korea

PLEASE CONTACT

www.hyundai-ce.com 2018. 11 Rev.7

MOVING YOU FURTHER

HX235LCR

With Tier4 final / Stage Ⅳ Engine installed

*Photo may include optional equipment.

Net Power	Gross Power	Travel Speed	Operating Weight
SAE J1349 / 179 Hp (133 kW) at 1,950 rpm	SAE J1995 / 182.6 Hp (136 kW) at 1,950 rpm	5.8 km/hr (3.60 mph) / 3.4 km/hr (2.11 mph)	24,000 kg / 52,910 lb

HYUNDAI CONSTRUCTION EQUIPMENT

RULE THE GROUND

The HX Series excavators are products of HHI's spirit of initiative, creativity, and strong drive. HHI's engineers, who are the best in the industry, have worked tirelessly to offer a zero-defect product. The new HX Series reflects customers' needs in the field gleaned by thorough monitoring. They maximize fuel efficiency and performance proven by rigorous field tests and quality control.

*Photo may include optional equipment.

RULE THE GROUND

The HX series exceeds customer's expectation!
Become a true leader on the ground with HHI's HX series.

HX235LCR

WORK MAX, WORTH MAX

- ECO Gauge
- IPC (Intelligent Power Control)
- New Variable Power Control
- Electronic Viscous Fan Clutch
- Attachment Flow Control (Option)
- New Cooling System with Increased Air Flow
- Enlarged Air Inlet with Grill Cover
- One Pedal Straight Travel (Option)
- Cycle Time Improvement

MORE RELIABLE, MORE SUSTAINABLE

- Durable Cooling Module
- Reinforced Pin, Bush, and Polymer Shim
- Reinforced Durability of Upper and Lower Structure and Attachments
- Wear Resistant Cover Plate
- Hi-grade (High-pressure) Hoses

INFOTAINMENT FRONTIER

- Intelligent and Wide Cluster
- Operating Simulation for Joy & Achievement
- Wi-Fi Direct with Smart Phone (Miracast)
- Proportional Auxiliary Hydraulic System
- New Audio System

MODERN COMFORT, SIMPLE AND SAFE SOLUTION

- Easy Access to DEF/AdBlue® Supply System
- Hi-MATE (Remote Management System) (Option)
- Viscous Suspension Mount
- Swing Lock System (Option)
- Fine Swing Control (Option)

*Photo may include optional equipment.

*Photo may include optional equipment.

WORK MAX, WORTH MAX

Fuel Efficient System, Allows Great Performance

The HX Series has an eco-friendly, high-performance engine which ensures both excellent fuel efficiency and high power. With outstanding operating performance proven by rigorous tests at various work sites, it will satisfy any customer's needs.

ECO Gauge

Eco Gauge enable economic operation of machines. The gauge level and color displays engine torque and fuel efficiency level. On top of that, the status of fuel consumption such as average rate and the total amount of fuel consumed are displayed. Hourly and daily based fuel consumption can be checked in the detailed menu as well.

IPC (Intelligent Power Control)

The IPC controls Power depending on work environments. Its mode can be selected and released on the monitor. On the excavation mode, pump flow can be easily controlled by a lever, reducing fuel consumption.

Attachment Flow Control (Option)

The HX Series improves pump flow rate by independent control of two pumps. It optimizes attachments for effective flow rate setting depending on attachments (ten breaker types and ten crusher types), enabling various operations matching the site environments.

New Variable Power Control

The HX Series minimizes equipment input and output control signals to improve fuel efficiency. Its three-stage Power mode ensures the highest performance in any operating environment.

* P(power) mode: Maximizes speed and power of the equipment for heavy load work.
* S(standard) mode: Optimizes performance and fuel efficiency of the equipment for general load work.
* E(economy) mode: Improves the control system for light load work.

Electronic Viscous Fan Clutch

The electronic fan clutch reduces noise during operation by precisely controlling RPM depending on the hydraulic oil and coolant temperature of the working vehicle, and minimizes fuel consumption. It is also possible to shorten the warm up time of hydraulic oil.

Enlarged Air Inlet with Grill Cover

Enlarged vent hole of the air inlet side cover and fine net grill to prevent penetration of foreign materials further improve durability.

MORE RELIABLE, MORE SUSTAINABLE

New Exterior Design for Robustness and Safety

The true value of the HX Series lies in its durability. The robust upper and lower frame structure that can endure external shock and high-load work and the attachments whose performance was proven by rigorous tests further show the real value of the HX Series in tough working environments and promise higher productivity.

Durable Cooling Module

The HX Series has a durable cooling module that passed stringent tests, demonstrating the highest productivity in tough working environments.

Reinforced Pin, Bush, and Polymer Shim

The HX series improves lubricity of connecting parts between the equipment and attachments. Gaps with attachments are minimized by wear-resistant long-life pins, bushes, and polymer shims, supporting the highest performance with invariable durability.

Reinforced Durability of Upper and Lower Structure and Attachments

The upper and lower structure and attachments of the HX Series have higher durability than demanded on the site, as proven through numerous tests including road tests and virtual simulation. The wear resistance of the bucket has been improved by use of new material.

Wear Resistant Cover Plate

A wear-resistant cover plate is installed at the end of the arm to minimize abrasion on the connector between the arm and the bucket. Reduction of vibration of the buckets enables more stable operation even in high-load work.

*Photo may include optional equipment.

Hi-grade (High-pressure) Hoses

The HX Series uses high-pressure hoses with improved heat and pressure resistance, greatly increasing the durability of the equipment.

New Air Conditioning System

With further improved air conditioning and heating, the HX Series increases the APTC capacity by 15% to provide a pleasant environment for operators all the time. The ventilation was designed such that warm and cool air even reach operators' faces (increasing their work satisfaction) or allowing pleasant working environment.

INFOTAINMENT FRONTIER

Enhanced Instrument Panel for Easier Monitoring

Many electronic functions are concentrated on the most convenient spot for operators to ensure work efficiency. The highly-advanced infotainment system, a product of HHI's intensive information technology, enables both productivity and pleasant work at the same time! The HX Series of HHI provides higher value and pleasure to customers.

Intelligent and Wide Cluster

The 8-inch capacitive-type display (like smartphone display) of the HX Series is 15% larger than the previous model, delivering excellent legibility. The centralized switches on the display allow convenience of checking the urea level and temperature outside the cabin. The audio AUX, air conditioner, heater interoperation, wiper, lamp, overload warning, travel, alarm and inclination sensor also maximize operator's convenience.

Wi-Fi Direct with Smart Phone (Miracast)

The Miracast system based on Wi-Fi of the operator's smart phone enables easy and convenient use of various features of the smart phone on the big screen including navigation, web surfing, viewing of videos, and listening to music. (For Android mobile phone now)

Proportional Auxiliary Hydraulic System

· Opt: Proportional control switch for better speed control
· Enlarge the operation convenience

New Audio System

Radio player, USB-based MP3 player, integrated Bluetooth hands-free feature, and built-in microphone allow convenient phone calls while in work and in transit. The radio player was moved to the right side from the rear, allowing easier access.

MODERN COMFORT, SIMPLE AND SAFE SOLUTION

New Cabin for More Comfort

Low noise, low vibration, and ergonomic design make the cabin space more comfortable and pleasant! With focus on safety and convenience of operators, the HX Series allows rapid and safe equipment inspection anytime and anywhere, providing an optimal environment for operators to work.

Easy Access to DEF/AdBlue® Supply System

The DEF/AdBlue® tank is installed inside the tool box and its inlet is remotely located for easy access and convenient supply. Warning of overfill is given by a red lamp signal. The DEF/AdBlue® supply module is attached on the side of the hydraulic tank for easy maintenance and filter replacement.

Hi-MATE (Remote Management System) (Option)

Hi-MATE, Hyundai's proprietary remote management system, provides operators and dealer service personnel access to vital service and diagnostic information on the machine from any computer with internet access. Users can pinpoint machine location using digital mapping and set machine work boundaries, reducing the need for multiple service calls. Hi-MATE saves time and money for the owner and dealer by promoting preventative maintenance and reducing machine downtime.

* Operation of the system may be affected by the condition of telecommunication signal

*Photo may include optional equipment.

Swing Lock System (Option)

Swing Lock System is provided to maintain stability when swing movement needs to be limited, improving operating speed and productivity.

Fine Swing Control (Option)

Fine swing control is available for customer's convenience when users want to control fine swing.

SPECIFICATIONS

ENGINE

Maker / Model			CUMMINS QSB6.7 Engine
Type			Water cooled, 4 cycle Diesel, 6-cylinders in line, direct injection, turbocharged charger and air cooled
Rated flywheel horse power	SAE	J1995 (gross)	182.6Hp (136 kW)/ 1,950 rpm
		J1349 (net)	173Hp (129kW)/ 1,950 rpm
	DIN	6271/1 (gross)	185PS (136kW)/ 1,950 rpm
		6271/1 (net)	175PS (129kW)/ 1,950 rpm
Max. torque			85.7kgf.m (620lbf.ft)/1,500rpm
Bore X stroke			107mm X 124mm (4.2" X 4.9")
Piston displacement			6,700cc (409 in³)
Batteries			2 X 12V X 100AH
Starting motor			24V, 4.8kW
Alternator			24V, 95Amp

HYDRAULIC SYSTEM

MAIN PUMP

Type	Variable displacement tandem axis piston pumps
Max. flow	2 X 228.2 L /min (60.3 US gpm/50.2 UK gpm)
Sub-pump for pilot circuit	Gear pump

Cross-sensing and fuel saving pump system

HYDRAULIC MOTORS

Travel	Two speed axial pistons motor with brake valve and parking brake
Swing	Axial piston motor with automatic brake

RELIEF VALVE SETTING

Implement circuits	350 kgf/cm² (4,980 psi)
Travel	350 kgf/cm² (4,980 psi)
Power boost (boom, arm, bucket)	380 kgf/cm² (5,410 psi)
Swing circuit	285 kgf/cm² (4,050 psi)
Pilot circuit	40 kgf/cm² (570 psi)
Service valve	Installed

HYDRAULIC CYLINDERS

No. of cylinder bore X stroke		Boom: 2-125 X 1,260 mm ( )
		Arm: 1-160 X 1,610 mm ( )
		Bucket: 1-120 X 1,055 mm (4.7" X 41.5")
		Blade: 2-130 X 240 mm ( )
	2-Piece Boom	1st: 2-105 X 995 mm (4.1" X 39.2")
		2nd: 1-145 X 613 mm (5.7" X 24.1")

DRIVES & BRAKES

Drive method	Fully hydrostatic type
Drive motor	Axial piston motor, in-shoe design
Reduction system	Planetary reduction gear
Max. drawbar pull	20,600kgf (45,415 lbf)
Max. travel speed (high / low)	5.5 km/hr (3.5mph) / 3.3 km/hr (2.1mph)
Gradeability	35° (70 %)
Parking brake	Multi wet disc

CONTROL

Pilot pressure operated joysticks and pedals with detachable lever provide almost effortless and fatigueless operation.

Pilot control	Two joysticks with one safety lever (LH): Swing and arm, (RH): Boom and bucket(ISO)
Traveling and steering	Two levers with pedals
Engine throttle	Electric, Dial type

SWING SYSTEM

Swing motor	Fixed displacement axial piston motor
Swing reduction	Planetary gear reduction
Swing bearing lubrication	Grease-bathed
Swing brake	Multi wet disc
Swing speed	10.8 rpm

SERVICE REFILL CAPACITIES

Re-filling	liter	US gal	UK gal
Fuel tank	320	84.5	70.4
Engine coolant	40	10.6	8.8
Engine oil	23.7	6.3	5.2
Swing device	7	1.8	1.5
Final drive (each)	4.5	1.2	1.0
DEF / AdBlue R tank	27	7.1	5.9
Hydraulic system (including tank)	275	72.6	60.5
Hydraulic tank	160	42.3	35.2

UNDERCARRIAGE

The X-leg type center frame is integrally welded with reinforced box-section track frames. The undercarriage includes lubricated rollers, idlers, track adjusters with shock absorbing springs and sprockets, and a track chain with double or triple grouser shoes.

Center frame	X - leg type
Track frame	Pentagonal box type
No. of shoes on each side	49 EA
No. of carrier roller on each side	2 EA
No. of track roller on each side	9 EA
No. of rail guard on each side	2 EA

OPERATING WEIGHT (APPROXIMATE)

Operating weight, including 5,680mm (18' 8") boom, 2,920mm (9' 7") arm, SAE heaped 0.80m3 (1.05 yd3) bucket, lubricant, coolant, full fuel tank, full hydraulic tank, and all standard equipments.

OPERATING WEIGHT

Shoes		Operating weight	Ground pressure
Type	Width mm (in)	kg (lb)	kgf/cm² (psi)
Triple grouser	600 (24")	24,000 (52,910)	0.51 (7.25)
	700 (28")	24,280 (53,530)	0.44 (6.26)
	800 (32")	24,560 (54,140)	0.39 (5.55)
	900 (36")	24,840 (54,760)	0.35 (4.98)

AIR CONDITIONING SYSTEM

The air condition system for the machine contains the fluorinated greenhouse gas with global warming potential of R134a.
(Global Warming Potential : 1430)
The system hold 0.75kg refrigerant consisting of a CO_2 equivalent 1.07kg metric tonne. For more information, Please refer to the manual.

BUCKET SELECTION GUIDE & DIGGING FORCE

BUCKETS

All buckets are welded with high-strength steel.

SAE heaped m³ (yd³)	0.51 (0.67)	0.80 (1.05) 0.87 (1.14) 0.92 (1.20)	1.10 (1.44) 1.20 (1.57)	1.34 (1.75)	◈ 0.74 (0.97) ◈ 0.90 (1.18) ◈ 1.05 (1.37)	◉ 0.87 (1.14)	▣ 0.75 (0.98)

Capacity m³ (yd³)		Width mm (in)		Weight kg (lb)	Recommendation mm (ft.in)					
					5,680 (18' 8") Mono Boom			5,650 (18'6") 2-Piece Boom		
SAE heaped	CECE heaped	Without side cutters	With side cutters		2,000 (6' 7") Arm	2,400 (7' 10") Arm	2,920 (9' 7") Arm	2,000 (6' 7") Arm	2,400 (7' 10") Arm	2,920 (9' 7") Arm
0.51 (0.67)	0.45 (0.59)	700 (27.6)	820 (32.3)	570 (1,260)	●	●	●	●	●	●
0.80 (1.05)	0.70 (0.92)	1,000 (39.4)	1,120 (44.1)	700 (1,540)	●	●	●	●	●	■
0.87 (1.14)	0.75 (0.98)	1,090 (42.9)	1,210 (47.6)	740 (1,630)	●	●	■	●	●	■
0.92 (1.20)	0.80 (1.05)	1,150 (45.3)	1,270 (50.0)	770 (1,700)	●	●	■	●	●	▲
1.10 (1.44)	0.96 (1.26)	1,320 (52.0)	1,440 (56.7)	830 (1,830)	●	■	▲	■	■	▲
1.20 (1.57)	1.00 (1.31)	1,400 (55.1)	1,520 (59.8)	850 (1,870)	■	▲	-	■	▲	-
1.34 (1.75)	1.15 (1.50)	1,550 (61.0)	1,670 (65.7)	920 (2,030)	▲	▲	-	▲	-	-
◈ 0.74 (0.97)	0.65 (0.85)	985 (38.8)	-	770 (1,700)	●	●	●	●	●	■
◈ 0.90 (1.18)	0.80 (1.05)	1,095 (43.1)	-	810 (1,790)	●	●	■	●	●	▲
◈ 1.05 (1.37)	0.92 (1.20)	1,290 (50.8)	-	890 (1,960)	●	■	▲	■	■	▲
◉ 0.87 (1.14)	0.75 (0.98)	1,140 (44.9)	-	900 (1,980)	●	●	■	●	●	▲
▣ 0.75 (0.98)	0.65 (0.85)	1,790 (70.5)	-	880 (1,940)	●	●	■	●	●	▲

◈ Heavy duty bucket
◉ Rock-Heavy duty bucket
▣ Slope finishing bucket

● : Applicable for materials with density of 2,000 kgf/m³ (3,370 lbf/yd³) or less
■ : Applicable for materials with density of 1,600 kgf/m³ (2,700 lbf/yd³) or less
▲ : Applicable for materials with density of 1,100 kgf/m³ (1,850 lbf/yd³) or less

ATTACHMENT

Booms and arms are welded with a low-stress, full-box section design.
5.68m (18'8") Mono, 5.65m (18'6") 2 Piece Booms and 2.0m (6'7"), 2.4m (7'10"), 2.92m (9'7") Arms are available.

DIGGING FORCE

Arm	Length	mm (ft.in)	2,000 (6' 7")	2,400 (7' 10")	2,920 (9' 7")	Remark
	Weight	kg (lb)	975 (2,150)	1,045 (2,300)	1,095 (2,410)	
Bucket digging force	SAE	kN	133.4 [144.8]	133.4 [144.8]	133.4 [144.8]	[ ]: Power Boost
		kgf	13600 [14770]	13600 [14770]	13600 [14770]	
		lbf	29980 [32550]	29980 [32550]	29980 [32550]	
	ISO	kN	152.0 [165.0]	152.0 [165.0]	152.0 [165.0]	
		kgf	15500 [16830]	15500 [16830]	15500 [16830]	
		lbf	34170 [37100]	34170 [37100]	34170 [37100]	
Arm crowd force	SAE	kN	144.2 [156.5]	119.6 [129.9]	102.0 [110.7]	
		kgf	14700 [15960]	12200 [13250]	10400 [11290]	
		lbf	32410 [35190]	26900 [29210]	22930 [24900]	
	ISO	kN	151.0 [164.0]	125.5 [136.3]	106.9 [116.1]	
		kgf	15400 [16720]	12800 [13900]	10900 [11830]	
		lbf	33950 [36860]	28220 [30640]	24030 [26090]	

Note: Arm weight includes bucket cylinder, linkage, and pin

DIMENSIONS & WORKING RANGE

HX235LCR MONO BOOM DIMENSIONS

5.68 m (18' 8") BOOM and 2.0 m (6' 7"), 2.4 m (7' 10"), 2.92 m (9' 7") ARM

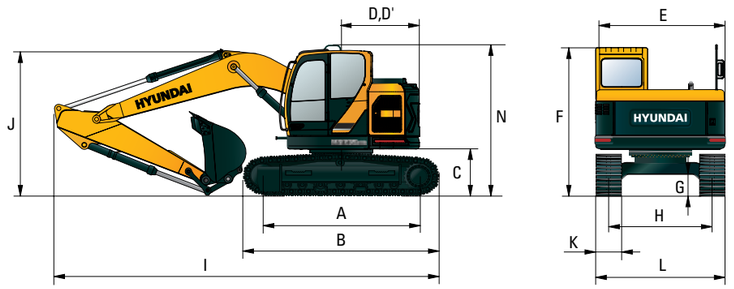

Unit : mm (ft · in)

A	Tumbler distance	3,650 (12' 0")
B	Overall length of crawler	4,404 (14' 6")
C	Ground clearance of counterweight	1,080 (3' 7")
D	Tail swing radius	1,780 (6' 04")
D'	Rear-end length	1,780 (6' 04")
E	Overall width of upperstructure	2,980 (9' 9")
F	Overall height of cab	3,100 (10' 2")
G	Min. ground clearance	480 (1' 7")
H	Track gauge	2,390 (7' 10")
N	Overall height of guardrail	3,290 (10' 10")

	Boom length	5,680 (18' 8")		
	Arm length	2,000 (6' 7")	2,400 (7' 10")	2,920 (9' 7")
I	Overall length	9,040 (29' 8")	8,950 (29' 4")	8,910 (29' 3")
J	Overall height of boom	3,200 (10' 6")	3,100 (10' 2")	3,020 (9' 11")
K	Track shoe width	600 (24")	700 (28")	800 (32")	900 (36")
L	Overall width	2,990 (9' 10")	3,090 (10' 2")	3,190 (10' 6")	3,290 (10' 10")

HX235LCR MONO BOOM WORKING RANGE

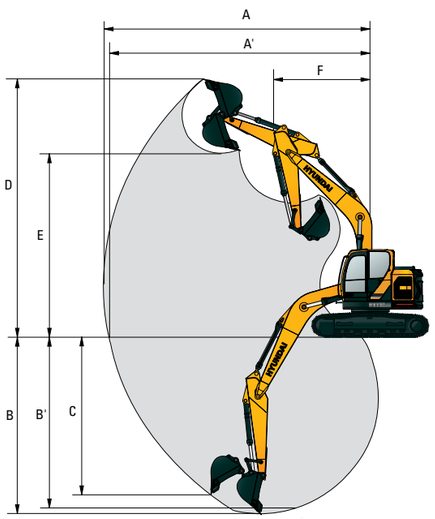

Unit : mm (ft · in)

	Boom length	5,680 (18' 8")		
	Arm length	2,000 (6' 7")	2,400 (7' 10")	2,920 (9' 7")
A	Max. digging reach	9,040 (29' 8")	9,430 (30' 11")	9,910 (32' 6")
A'	Max. digging reach on ground	8,860 (29' 1")	9,260 (30' 5")	9,750 (32' 0")
B	Max. digging depth	5,780 (19' 0")	6,180 (20' 3")	6,700 (22' 0")
B'	Max. digging depth (8' level)	5,550 (19' 0")	5,980 (19' 7")	6,530 (21' 5")
C	Max. vertical wall digging depth	5,140 (16' 10")	5,710 (18' 9")	6,270 (20' 7")
D	Max. digging height	10,090 (33' 1")	10,420 (34' 2")	10,830 (35' 6")
E	Max. dumping height	7,190 (23' 7")	7,510 (24' 8")	7,890 (25' 11")
F	Min. swing radius	2,860 (9' 5")	2,550 (8' 4")	2,350 (7' 9")

HX235LCR MONO BOOM (DOZER TYPE) DIMENSIONS

5.68 m (18' 8") BOOM and 2.0 m (6' 7"), 2.4 m (7' 10"), 2.92 m (9' 7") ARM

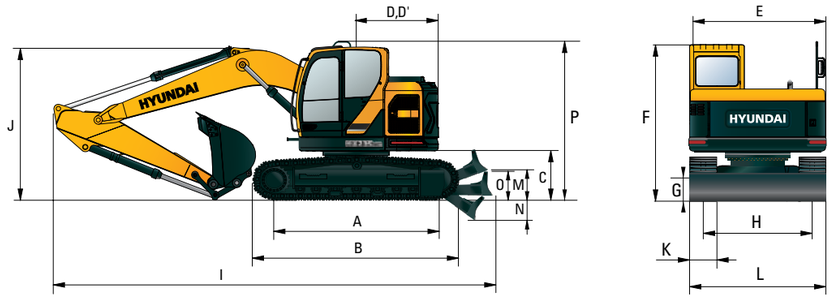

Unit : mm (ft · in)

A	Tumbler distance	3,650 (12' 0")
B	Overall length of crawler	4,404 (14' 6")
C	Ground clearance of counterweight	1,080 (3' 7")
D	Tail swing radius	1,780 (6' 04")
D'	Rear-end length	1,780 (6' 04")
E	Overall width of upperstructure	2,980 (9' 9")
F	Overall height of cab	3,100 (10' 2")
G	Min. ground clearance	480 (1' 7")
H	Track gauge	2,390 (7' 10")
M	Ground clearance of blade up	550 (1' 10")
N	Depth of blade down	410 (1' 4")
O	Height of blade	740 (2' 5")
P	Overall height of guardrail	3,290 (10' 10")

	Boom length	5,680 (18' 8")		
	Arm length	2,000 (6' 7")	2,400 (7' 10")	2,920 (9' 7")
I	Overall length	10,020 (32' 10")	9,930 (32' 7")	9,890 (32' 5")
J	Overall height of boom	3,200 (10' 6")	3,100 (10' 2")	3,020 (9' 11")
K	Track shoe width	600 (24")	700 (28")	800 (32")	900 (36")
L	Overall width	2990 (9' 10")	3,090 (10' 2")	3,190 (10' 6")	3,290 (10' 10")

HX235LCR MONO BOOM (DOZER TYPE) WORKING RANGE

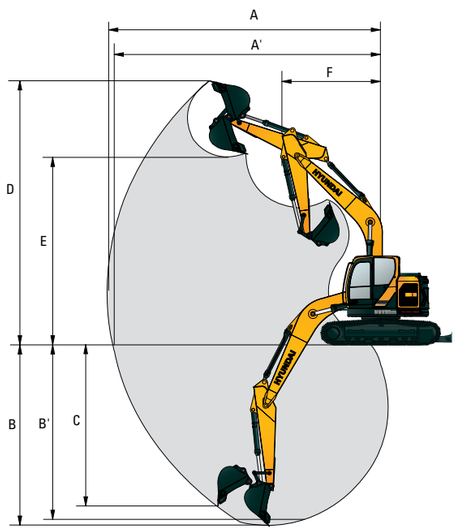

Unit : mm (ft · in)

	Boom length	5,680 (18' 8")		
	Arm length	2,000 (6' 7")	2,400 (7' 10")	2920 (9' 7")
A	Max. digging reach	9,040 (29' 8")	9,430 (30' 11")	9,910 (32' 6")
A'	Max. digging reach on ground	8,860 (29' 1")	9,260 (30' 5")	9,750 (32' 0")
B	Max. digging depth	5,780 (19' 0")	6,180 (20' 3")	6,700 (22' 0")
B'	Max. digging depth (8' level)	5,550 (18' 3")	5,980 (19' 7")	6,530 (21' 5")
C	Max. vertical wall digging depth	5,140 (16' 10")	5,710 (18' 9")	6,270 (20' 7")
D	Max. digging height	10,090 (33' 1")	10,420 (34' 2")	10,830 (35' 6")
E	Max. dumping height	7,190 (23' 7")	7,510 (24' 8")	7,890 (25' 11")
F	Min. swing radius	2,860 (9' 5")	2,550 (8' 4")	2,350 (7' 9")

DIMENSIONS & WORKING RANGE

HX235LCR 2-PIECE BOOM DIMENSIONS

5.65 m (18' 6") 2-Piece Boom and 2.0 m (6' 7"), 2.4 m (7' 10"), 2.92 m (9' 7") Arm

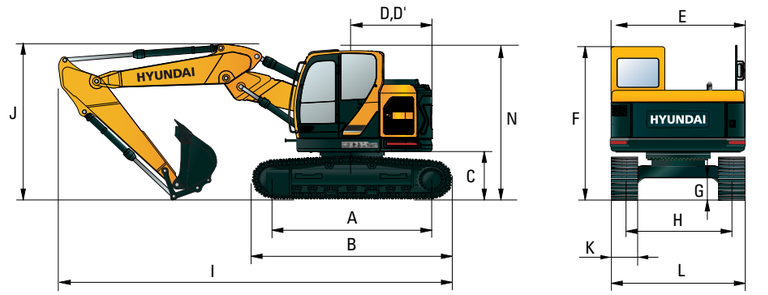

Unit : mm (ft · in)

A	Tumbler distance	3,650 (12' 0")
B	Overall length of crawler	4,404 (14' 6")
C	Ground clearance of counterweight	1,080 (3' 7")
D	Tail swing radius	1,780 (6' 04")
D'	Rear-end length	1,780 (6' 04")
E	Overall width of upperstructure	2,980 (9' 9")
F	Overall height of cab	3,100 (10' 2")
G	Min. ground clearance	480 (1' 7")
H	Track gauge	2,390 (7' 10")
N	Overall height of guardrail	3,290 (10' 10")

	Boom length	5,650 (18' 6") 2-Piece		
	Arm length	2,000 (6' 7")	2,400 (7' 10")	2,920 (9' 7")
I	Overall length	9,000 (29' 6")	8,910 (29' 3")	8,900 (29' 2")
J	Overall height of boom	3,050 (10' 0")	3,000 (9' 10")	2,990 (9' 10")
L	Track shoe width	600 (24")	700 (28")	800 (32")	900 (36")
M	Overall width	2,990 (9' 10")	3,090 (10' 2")	3,190 (10' 6")	3,290 (10' 10")

HX235LCR 2-PIECE BOOM WORKING RANGE

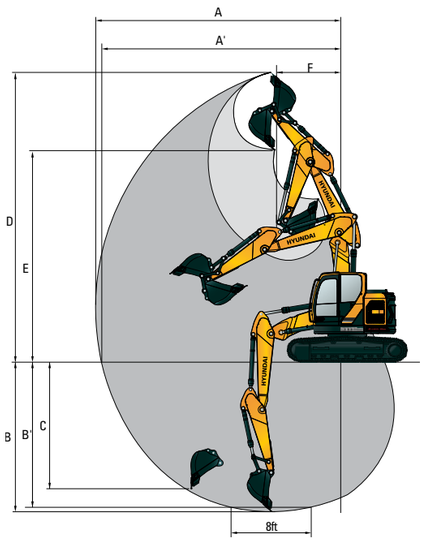

Unit : mm (ft · in)

	Boom length	5,650 (18' 6") 2-Piece		
	Arm length	2,000 (6' 7")	2,400 (7' 10")	2,920 (9' 7")
A	Max. digging reach	9,050 (29' 8")	9,460 (31' 0")	10,020 (32' 10")
A'	Max. digging reach on ground	8,880 (29' 2")	9,290 (30' 6")	9,860 (32' 4")
B	Max. digging depth	5,460 (17' 11")	5,860 (19' 3")	6,380 (20' 11")
B'	Max. digging depth (8' level)	5,340 (17' 6")	5,750 (18' 10")	6,270 (20' 7")
C	Max. vertical wall digging depth	4,530 (14' 10")	4,970 (16' 4")	5,520 (18' 1")
D	Max. digging height	10,600 (34' 9")	10,990 (36' 1")	11,470 (37' 8")
E	Max. dumping height	7,680 (25' 2")	8,090 (26' 7")	8,540 (28' 0")
F	Min. swing radius	2,130 (7' 0")	2,030 (6' 8")	2,000 (6' 7")

HX235LCR 2-PIECE BOOM (DOZER TYPE) DIMENSIONS

5.65 m (18' 6") 2-Piece Boom and 2.0 m (6' 7"), 2.4 m (7' 10"), 2.92 m (9' 7") Arm

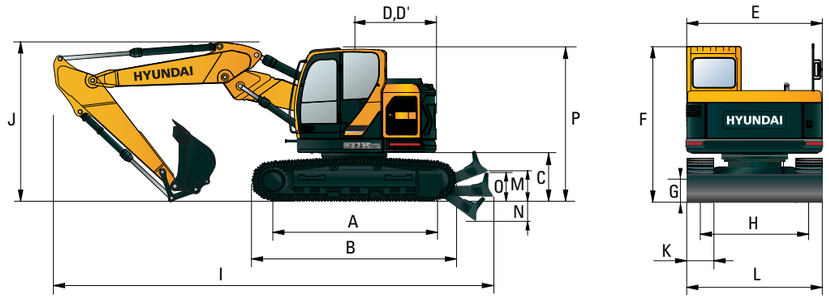

Unit : mm (ft · in)

A	Tumbler distance	3,650 (12' 0")
B	Overall length of crawler	4,404 (14' 6")
C	Ground clearance of counterweight	1,080 (3' 7")
D	Tail swing radius	1,780 (6' 04")
D'	Rear-end length	1,780 (6' 04")
E	Overall width of upperstructure	2,980 (9' 9")
F	Overall height of cab	3,100 (10' 2")
G	Min. ground clearance	480 (1' 7")
H	Track gauge	2,390 (7' 10")
M	Ground clearance of blade up	550 (1' 10")
N	Depth of blade down	410 (1' 4")
O	Height of blade	740 (2' 5")
P	Overall height of guardrail	3,290 (10' 10")

	Boom length	5,650 (18' 6") 2-Piece		
	Arm length	2,000 (6' 7")	2,400 (7' 10")	2,920 (9' 7")
I	Overall length	9,850 (32' 4")	9,760 (32' 0")	9,750 (32' 0")
J	Overall height of boom	3,050 (10' 0")	3,000 (9' 10")	2,990 (9' 10")
K	Track shoe width	600 (24")	700 (28")	800 (32")	900 (36")
L	Overall width	2990 (9' 10")	3,090 (10' 2")	3,190 (10' 6")	3,290 (10' 10")

HX235LCR 2-PIECE BOOM (DOZER TYPE) WORKING RANGE

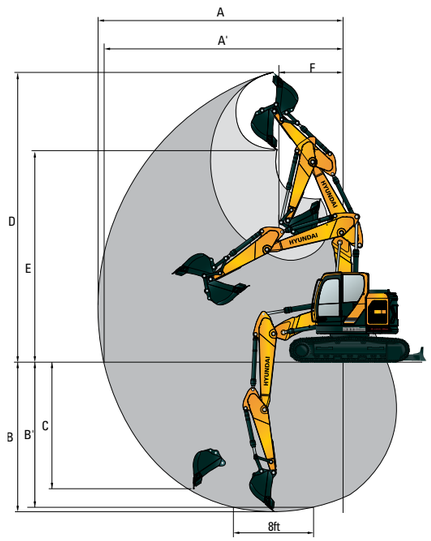

Unit : mm (ft · in)

	Boom length	5,650 (18' 6") 2-Piece		
	Arm length	2,000 (6' 7")	2,400 (7' 10")	2920 (9' 7")
A	Max. digging reach	9,050 (29' 8")	9,460 (31' 0")	10,020 (32' 10")
A'	Max. digging reach on ground	8,880 (29' 2")	9,290 (30' 6")	9,860 (32' 4")
B	Max. digging depth	5,460 (17' 11")	5,860 (19' 3")	6,380 (20' 11")
B'	Max. digging depth (8' level)	5,340 (17' 6")	5,750 (18' 10")	6,270 (20' 7")
C	Max. vertical wall digging depth	4,530 (14' 10")	4,970 (16' 4")	5,520 (18' 1")
D	Max. digging height	10,600 (34' 9")	10,990 (36' 1")	11,470 (37' 8")
E	Max. dumping height	7,680 (25' 2")	8,090 (26' 7")	8,540 (28' 0")
F	Min. swing radius	2,130 (7' 0")	2,030 (6' 8")	2,000 (6' 7")

LIFTING CAPACITY

Rating over-front | Rating over-side or 360 degree

HX235LCR MONO BOOM

Boom: 5.68 m (18' 8") / Arm: 2.0 m (6' 7") / Bucket: 0.80 m³ (1.05yd³) SAE heaped / Shoe: 600mm(24") triple grouser

Load point height m (ft)		Load radius								At max. reach		
		3.0 m (10 ft)		4.5 m (15 ft)		6.0 m (20 ft)		7.5 m (25 ft)		Capacity		Reach
												m (ft)
10.5 m	kg									*4160	*4160	4.63
(35 ft)	lb									*9170	*9170	(15.2)
9.0 m	kg									*4580	*4580	4.48
(30 ft)	lb									*10100	*10100	(14.7)
7.5 m	kg			*4770	*4770					*4100	*4100	6.56
(25 ft)	lb			*10520	*10520					*9040	*9040	(21.5)
6.0 m	kg			*4930	*4930	*4540	*4540			*3990	3080	7.70
(20 ft)	lb			*10870	*10870	*10010	*10010			*8800	6790	(25.3)
4.5 m	kg	*8300	*8300	*5880	*5880	*4860	4630			*3990	2580	8.36
(15 ft)	lb	*18300	*18300	*12960	*12960	*10710	10210			*8800	5690	(27.4)
3.0 m	kg			*7250	6860	*5440	4370	*4570	3000	*4030	2340	8.67
(10 ft)	lb			*15980	15120	*11990	9630	*10080	6610	*8880	5160	(28.4)
1.5 m	kg			*8350	6350	*5980	4120	*4770	2890	*4080	2290	8.66
(5 ft)	lb			*18410	14000	*13180	9080	*10520	6370	*8990	5050	(28.4)
Ground	kg			*8660	6110	*6250	3960			*4100	2410	8.36
Line	lb			*19090	13470	*13780	8730			*9040	5310	(27.4)
-1.5 m	kg	*11410	*11410	*8260	6080	*6050	3910			*4010	2790	7.69
(-5 ft)	lb	*25150	*25150	*18210	13400	*13340	8620			*8840	6150	(25.2)
-3.0 m	kg	*9650	*9650	*7130	6190	*5090	4000			*3610	*3610	6.55
(-10 ft)	lb	*21270	*21270	*15720	13650	*11220	8820			*7960	*7960	(21.5)

Boom: 5.68 m (18' 8") / Arm: 2.40 m (7' 10") / Bucket: 0.80 m³ (1.05 yd³) SAE heaped / Shoe: 600mm(24") triple grouser

Load point height m (ft)		Load radius										At max. reach		
		1.5 m (5 ft)		3.0 m (10 ft)		4.5 m (15 ft)		6.0 m (20 ft)		7.5 m (25 ft)		Capacity		Reach
														m (ft)
9.0 m	kg											*4060	*4060	5.25
(30 ft)	lb											*8950	*8950	(17.2)
7.5 m	kg					*4230	*4230					*3770	3710	7.07
(25 ft)	lb					*9330	*9330					*8310	8180	(23.2)
6.0 m	kg					*4450	*4450	*4170	*4170			*3700	2800	8.12
(20 ft)	lb					*9810	*9810	*9190	*9190			*8160	6170	(26.6)
4.5 m	kg			*7210	*7210	*5400	*5400	*4550	*4550	*3900	3120	*3720	2370	8.74
(15 ft)	lb			*15900	*15900	*11900	*11900	*10030	*10030	*8600	6880	*8200	5220	(28.7)
3.0 m	kg			*11320	*11320	*6790	*6790	*5170	4410	*4360	3010	*3770	2160	9.04
(10 ft)	lb			*24960	*24960	*14970	*14970	*11400	9720	*9610	6640	*8310	4760	(29.7)
1.5 m	kg					*8040	6400	*5790	4130	*4630	2880	*3830	2110	9.03
(5 ft)	lb					*17730	14110	*12760	9110	*10210	6350	*8440	4650	(29.6)
Ground	kg			*9170	*9170	*8580	6100	*6150	3940	*4760	2780	*3870	2210	8.74
Line	lb			*20220	*20220	*18920	13450	*13560	8690	*10490	6130	*8530	4870	(28.7)
-1.5 m	kg	*9770	*9770	*12150	12070	*8390	6010	*6100	3860			*3840	2510	8.12
(-5 ft)	lb	*21540	*21540	*26790	26610	*18500	13250	*13450	8510			*8470	5530	(26.6)
-3.0 m	kg	*14230	*14230	*10480	*10480	*7490	6080	*5420	3900			*3600	3230	7.06
(-10 ft)	lb	*31370	*31370	*23100	*23100	*16510	13400	*11950	8600			*7940	7120	(23.2)
-4.5 m	kg			*7610	*7610	*5470	*5470							
(-15 ft)	lb			*16780	*16780	*12060	*12060							

1. Lifting capacity are based on ISO 10567.
2. Lifting capacity of the ROBEX series does not exceed 75% of tipping load with the machine on firm, level ground or 87% of full hydraulic capacity.
3. The load point is a hook (standard equipment) located on the back of the bucket.
4. (*) indicates load limited by hydraulic capacity.

Rating over-front | Rating over-side or 360 degree

HX235LCR MONO BOOM

Boom: 5.68 m (18' 8") / Arm: 2.92 m (9' 7") / Bucket: 0.80 m³ (1.05 yd³) SAE heaped / Shoe: 600mm(24") triple grouser

Load point height m (ft)		Load radius										At max. reach		
		1.5 m (5 ft)		3.0 m (10 ft)		4.5 m (15 ft)		6.0 m (20 ft)		7.5 m (25 ft)		Capacity		Reach
														m (ft)
9.0 m	kg					*2920	*2920					*3570	*3570	6.12
(30 ft)	lb					*6440	*6440					*7870	*7870	(20.1)
7.5 m	kg							*3260	*3260			*3410	3210	7.70
(25 ft)	lb							*7190	*7190			*7520	7080	(25.3)
6.0 m	kg							*3720	*3720			*3380	2500	8.66
(20 ft)	lb							*8200	*8200			*7450	5510	(28.4)
4.5 m	kg					*4750	*4750	*4140	*4140	*3800	3170	*3410	2130	9.24
(15 ft)	lb					*10470	*10470	*9130	*9130	*8380	6990	*7520	4700	(30.3)
3.0 m	kg			*9680	*9680	*6180	*6180	*4810	4460	*4100	3030	*3460	1950	9.52
(10 ft)	lb			*21340	*21340	*13620	*13620	*10600	9830	*9040	6680	*7630	4300	(31.2)
1.5 m	kg			*9550	*9550	*7590	6510	*5500	4160	*4440	2880	*3530	1900	9.52
(5 ft)	lb			*21050	*21050	*16730	14350	*12130	9170	*9790	6350	*7780	4190	(31.2)
Ground	kg			*9930	*9930	*8400	6110	*5990	3930	*4670	2760	*3600	1970	9.24
Line	lb			*21890	*21890	*18520	13470	*13210	8660	*10300	6080	*7940	4340	(30.3)
-1.5 m	kg	*8850	*8850	*12790	11890	*8470	5950	*6100	3810	*4630	2690	*3620	2210	8.66
(-5 ft)	lb	*19510	*19510	*28200	26210	*18670	13120	*13450	8400	10210	5930	*7980	4870	(28.4)
-3.0 m	kg	*12280	*12280	*11380	*11380	*7840	5960	*5690	3810			*3500	2750	7.69
(-10 ft)	lb	*27070	*27070	*25090	*25090	*17280	13140	*12540	8400			*7720	6060	(25.2)
-4.5 m	kg			*8920	*8920	*6300	6140					*2930	*2930	6.11
(-15 ft)	lb			*19670	*19670	*13890	13540					*6460	*6460	(20.0)

Boom: 5.68 m (18' 8") / Arm: 2.0 m (6' 7") / Bucket: 0.80 m³ (1.05yd³) SAE heaped / Shoe: 600mm(24") triple grouser

Load point height m (ft)		Load radius								At max. reach		
		3.0 m (10 ft)		4.5 m (15 ft)		6.0 m (20 ft)		7.5 m (25 ft)		Capacity		Reach
												m (ft)
10.5 m	kg									*4160	*4160	4.63
(35 ft)	lb									*9170	*9170	(15.2)
9.0 m	kg									*4580	*4580	4.48
(30 ft)	lb									*10100	*10100	(14.7)
7.5 m	kg			*4770	*4770					*4100	*4100	6.56
(25 ft)	lb			*10520	*10520					*9040	*9040	(21.5)
6.0 m	kg			*4930	*4930	*4540	*4540			*3990	3520	7.70
(20 ft)	lb			*10870	*10870	*10010	*10010			*8800	7760	(25.3)
4.5 m	kg	*8300	*8300	*5880	*5880	*4860	*4860			*3990	2960	8.36
(15 ft)	lb	*18300	*18300	*12960	*12960	*10710	*10710			*8800	6530	(27.4)
3.0 m	kg			*7250	*7250	*5440	4980	*4570	3440	*4030	2710	8.67
(10 ft)	lb			*15980	*15980	*11990	10980	*10080	7580	*8880	5970	(28.4)
1.5 m	kg			*8350	7280	*5980	4730	*4770	3330	*4080	2660	8.66
(5 ft)	lb			*18410	16050	*13180	10430	*10520	7340	*8990	5860	(28.4)
Ground	kg			*8660	7040	*6250	4560			*4100	2800	8.36
Line	lb			*19090	15520	*13780	10050			*9040	6170	(27.4)
-1.5 m	kg	*11410	*11410	*8260	7010	*6050	4510			*4010	3220	7.69
(-5 ft)	lb	*25150	*25150	*18210	15450	*13340	9940			*8840	7100	(25.2)
-3.0 m	kg	*9650	*9650	*7130	7130	*5090	4610			*3610	*3610	6.55
(-10 ft)	lb	*21270	*21270	*15720	15720	*11220	10160			*7960	*7960	(21.5)

1. Lifting capacity are based on ISO 10567.
2. Lifting capacity of the ROBEX series does not exceed 75% of tipping load with the machine on firm, level ground or 87% of full hydraulic capacity.
3. The load point is a hook (standard equipment) located on the back of the bucket.
4. (*) indicates load limited by hydraulic capacity.

LIFTING CAPACITY

Rating over-front | Rating over-side or 360 degree

HX235LCR MONO BOOM

Boom: 5.68 m (18' 8") / Arm: 2.0 m (6' 7") / Bucket: 0.80 m³ (1.05yd³) SAE heaped / Shoe: 600mm(24") triple grouser

Load point height m (ft)		Load radius								At max. reach		
		3.0 m (10 ft)		4.5 m (15 ft)		6.0 m (20 ft)		7.5 m (25 ft)		Capacity		Reach
												m (ft)
10.5 m	kg									*4160	*4160	4.63
(35 ft)	lb									*9170	*9170	(15.2)
9.0 m	kg									*4580	*4580	4.48
(30 ft)	lb									*10100	*10100	(14.7)
7.5 m	kg			*4770	*4770					*4100	*4100	6.56
(25 ft)	lb			*10520	*10520					*9040	*9040	(21.5)
6.0 m	kg			*4930	*4930	*4540	*4540			*3990	3300	7.70
(20 ft)	lb			*10870	*10870	*10010	*10010			*8800	7280	(25.3)
4.5 m	kg	*8300	*8300	*5880	*5880	*4860	*4860			*3990	2770	8.36
(15 ft)	lb	*18300	*18300	*12960	*12960	*10710	*10710			*8800	6110	(27.4)
3.0 m	kg			*7250	*7250	*5440	4660	*4570	3220	*4030	2530	8.67
(10 ft)	lb			*15980	*15980	*11990	10270	*10080	7100	*8880	5580	(28.4)
1.5 m	kg			*8350	6770	*5980	4410	*4770	3110	*4080	2480	8.66
(5 ft)	lb			*18410	14930	*13180	9720	*10520	6860	*8990	5470	(28.4)
Ground	kg			*8660	6530	*6250	4250			*4100	2610	8.36
Line	lb			*19090	14400	*13780	9370			*9040	5750	(27.4)
-1.5 m	kg	*11410	*11410	*8260	6500	*6050	4200			*4010	3000	7.69
(-5 ft)	lb	*25150	*25150	*18210	14330	*13340	9260			*8840	6610	(25.2)
-3.0 m	kg	*9650	*9650	*7130	6610	*5090	4290			*3610	*3610	6.55
(-10 ft)	lb	*21270	*21270	*15720	14570	*11220	9460			*7960	*7960	(21.5)

Boom: 5.68 m (18' 8") / Arm: 2.40 m (7' 10") / Bucket: 0.80 m³ (1.05 yd³) SAE heaped / Shoe: 600mm(24") triple grouser

Load point height m (ft)		Load radius										At max. reach		
		1.5 m (5 ft)		3.0 m (10 ft)		4.5 m (15 ft)		6.0 m (20 ft)		7.5 m (25 ft)		Capacity		Reach
														m (ft)
9.0 m	kg											*4060	*4060	5.25
(30 ft)	lb											*8950	*4060	(17.2)
7.5 m	kg					*4230	*4230					*3770	*3770	7.07
(25 ft)	lb					*9330	*9330					*8310	*8310	(23.2)
6.0 m	kg					*4450	*4450	*4170	*4170			*3700	3210	8.12
(20 ft)	lb					*9810	*9810	*9190	*9190			*8160	7080	(26.6)
4.5 m	kg			*7210	*7210	*5400	*5400	*4550	*4550	*3900	3560	*3720	2730	8.74
(15 ft)	lb			*15900	*15900	*11900	*11900	*10030	*10030	*8600	7850	*8200	6020	(28.7)
3.0 m	kg			*11320	*11320	*6790	*6790	*5170	5020	*4360	3450	*3770	2510	9.04
(10 ft)	lb			*24960	*24960	*14970	*14970	*11400	11070	*9610	7610	*8310	5530	(29.7)
1.5 m	kg					*8040	7340	*5790	4740	*4630	3320	*3830	2460	9.03
(5 ft)	lb					*17730	16180	*12760	10450	*10210	7320	*8440	5420	(29.6)
Ground	kg			*9170	*9170	*8580	7030	*6150	4540	*4760	3230	*3870	2570	8.74
Line	lb			*20220	*20220	*18920	15500	*13560	10010	*10490	7120	*8530	5670	(28.7)
-1.5 m	kg	*9770	*9770	*12150	*12150	*8390	6940	*6100	4460			*3840	2920	8.12
(-5 ft)	lb	*21450	*21540	*26790	*26790	*18500	15300	*13450	9830			*8470	6440	(26.6)
-3.0 m	kg	*14230	*14230	*10480	*10480	*7490	7020	*5420	4510			*3600	*3600	7.06
(-10 ft)	lb	*31370	*31370	*23100	*23100	*16510	15480	*11950	9940			*7940	*7940	(23.2)
-4.5 m	kg			*7610	*7610	*5470	*5470							
(-15 ft)	lb			*16780	*16780	*12060	*12060							

1. Lifting capacity are based on ISO 10567.
2. Lifting capacity of the ROBEX series does not exceed 75% of tipping load with the machine on firm, level ground or 87% of full hydraulic capacity.
3. The load point is a hook (standard equipment) located on the back of the bucket.
4. (*) indicates load limited by hydraulic capacity.

Rating over-front | Rating over-side or 360 degree

HX235LCR MONO BOOM

Boom: 5.68 m (18' 8") / Arm: 2.40 m (7' 10") / Bucket: 0.80 m³ (1.05 yd³) SAE heaped / Shoe: 600mm(24") triple grouser

Load point height m (ft)		Load radius										At max. reach		
		1.5 m (5 ft)		3.0 m (10 ft)		4.5 m (15 ft)		6.0 m (20 ft)		7.5 m (25 ft)		Capacity		Reach
														m (ft)
9.0 m	kg											*4060	*4060	5.25
(30 ft)	lb											*8950	*8950	(17.2)
7.5 m	kg					*4230	*4230					*3770	*3770	7.07
(25 ft)	lb					*9330	*9330					*8310	*8310	(23.2)
6.0 m	kg					*4450	*4450	*4170	*4170			*3700	3000	8.12
(20 ft)	lb					*9810	*9810	*9190	*9190			*8160	6610	(26.6)
4.5 m	kg			*7210	*7210	*5400	*5400	*4550	*4550	*3900	3340	*3720	2550	8.74
(15 ft)	lb			*15900	*15900	*11900	*11900	*10030	*10030	*8600	7360	*8200	5620	(28.7)
3.0 m	kg			*11320	*11320	*6790	*6790	*5170	4700	*4360	3230	*3770	2340	9.04
(10 ft)	lb			*24960	*24960	*14970	*14970	*11400	10360	*9610	7120	*8310	5160	(29.7)
1.5 m	kg					*8040	6830	*5790	4420	*4630	3100	*3830	2280	9.03
(5 ft)	lb					*17730	15060	*12760	9740	*10210	6830	*8440	5030	(29.6)
Ground	kg			*9170	*9170	*8580	6520	*6150	4230	*4760	3000	*3870	2390	8.74
Line	lb			*20220	*20220	*18920	14370	*13560	9330	*10490	6610	*8530	5270	(28.7)
-1.5 m	kg	*9770	*9770	*12150	12070	*8390	6440	*6100	4150			*3840	2710	8.12
(-5 ft)	lb	*21540	*21540	*26790	26610	*18500	14200	*13450	9150			*8470	5970	(26.6)
-3.0 m	kg	*14230	*14230	*10480	*10480	*7490	6510	*5420	4190			*3600	3470	7.06
(-10 ft)	lb	*31370	*31370	*23100	*23100	*16510	14350	*11950	9240			*7940	7650	(23.2)
-4.5 m	kg			*7610	*7610	*5470	*5470							
(-15 ft)	lb			*16780	*16780	*12060	*12060							

Boom: 5.68 m (18' 8") / Arm: 2.92 m (9' 7") / Bucket: 0.80 m³ (1.05 yd³) SAE heaped / Shoe: 600mm(24") triple grouser

Load point height m (ft)		Load radius										At max. reach		
		1.5 m (5 ft)		3.0 m (10 ft)		4.5 m (15 ft)		6.0 m (20 ft)		7.5 m (25 ft)		Capacity		Reach
														m (ft)
9.0 m	kg					*2920	*2920					*3570	*3570	6.12
(30 ft)	lb					*6440	*6440					*7870	*7870	(20.1)
7.5 m	kg							*3260	*3260			*3410	*3410	7.70
(25 ft)	lb							*7190	*7190			*7520	*7520	(25.3)
6.0 m	kg							*3720	*3720			*3380	2870	8.66
(20 ft)	lb							*8200	*8200			*7450	6330	(28.4)
4.5 m	kg					*4750	*4750	*4140	*4140	*3800	3620	*3410	2470	9.24
(15 ft)	lb					*10470	*10470	*9130	*9130	*8380	7980	*7520	5450	(30.3)
3.0 m	kg			*9680	*9680	*6180	*6180	*4810	*4810	*4100	3480	*3460	2280	9.52
(10 ft)	lb			*21340	*21340	*13620	*13620	*10600	*10600	*9040	7670	*7630	5030	(31.2)
1.5 m	kg			*9550	*9550	*7590	7450	*5500	4770	*4440	3330	*3530	2230	9.52
(5 ft)	lb			*21050	*21050	*16730	16420	*12130	10520	*9790	7340	*7780	4920	(31.2)
Ground	kg			*9930	*9930	*8400	7040	*5990	4530	*4670	3200	*3600	2310	9.24
Line	lb			*21890	*21890	*18520	15520	*13210	9990	*10300	7050	*7940	5090	(30.3)
-1.5 m	kg	*8850	*8850	*12790	11890	*8470	6880	*6100	4410	*4630	3140	*3620	2580	8.66
(-5 ft)	lb	*19510	*19510	*28200	26210	*18670	15170	*13450	9720	*10210	6920	*7980	5690	(28.4)
-3.0 m	kg	*12280	*12280	*11380	*11380	*7840	6900	*5690	4410			*3500	3180	7.69
(-10 ft)	lb	*27070	*27070	*25090	*25090	*17280	15210	*12540	9720			*7720	7010	(25.2)
-4.5 m	kg			*8920	*8920	*6300	*6300					*2930	*2930	6.11
(-15 ft)	lb			*19670	*19670	*13890	*13890					*6460	*6460	(20.0)

1. Lifting capacity are based on ISO 10567.
2. Lifting capacity of the ROBEX series does not exceed 75% of tipping load with the machine on firm, level ground or 87% of full hydraulic capacity.
3. The load point is a hook (standard equipment) located on the back of the bucket.
4. (*) indicates load limited by hydraulic capacity.

LIFTING CAPACITY

Rating over-front | Rating over-side or 360 degree

HX235LCR MONO BOOM

Boom: 5.68 m (18' 8") / Arm: 2.92 m (9' 7") / Bucket: 0.80 m³ (1.05 yd³) SAE heaped / Shoe: 600mm(24") triple grouser

Load point height m (ft)		Load radius										At max. reach		
		1.5 m (5 ft)		3.0 m (10 ft)		4.5 m (15 ft)		6.0 m (20 ft)		7.5 m (25 ft)		Capacity		Reach
														m (ft)
9.0 m	kg					*2920	*2920					*3570	*3570	6.12
(30 ft)	lb					*6440	*6440					*7870	*7870	(20.1)
7.5 m	kg							*3260	*3260			*3410	*3410	7.70
(25 ft)	lb							*7190	*7190			*7520	*7520	(25.3)
6.0 m	kg							*3720	*3720			*3380	2680	8.66
(20 ft)	lb							*8200	*8200			*7450	5910	(28.4)
4.5 m	kg					*4750	*4750	*4140	*4140	*3800	3390	*3410	2300	9.24
(15 ft)	lb					*10470	*10470	*9130	*9130	*8380	7470	*7520	5070	(30.3)
3.0 m	kg			*9680	*9680	*6180	*6180	*4810	4750	*4100	3250	*3460	2120	9.52
(10 ft)	lb			*21340	*21340	*13620	*13620	*10600	10470	*9040	7170	*7630	4670	(31.2)
1.5 m	kg			*9550	*9550	*7590	6930	*5500	4450	*4440	3100	*3530	2070	9.52
(5 ft)	lb			*21050	*21050	*16730	15280	*12130	9810	*9790	6830	*7780	4560	(31.2)
Ground	kg			*9930	*9930	*8400	6530	*5990	4220	*4670	2980	*3600	2150	9.24
Line	lb			*21890	*21890	*18520	14400	*13210	9300	*10300	6570	*7940	4740	(30.3)
-1.5 m	kg	*8850	*8850	*12790	12690	*8470	6370	*6100	4100	*4630	2910	*3620	2400	8.66
(-5 ft)	lb	*19510	*19510	*28200	27980	*18670	14040	*13450	9040	*10210	6420	*7980	5290	(28.4)
-3.0 m	kg	*12280	*12280	*11380	*11380	*7840	6390	*5690	4100			*3500	2960	7.69
(-10 ft)	lb	*27070	*27070	*25090	*25090	*17280	14090	*12540	9040			*7720	6530	(25.2)
-4.5 m	kg			*8920	*8920	*6300	*6300					*2930	*2930	6.11
(-15 ft)	lb			*19670	*19670	*13890	*13890					*6460	*6460	(20.0)

HX235LCR 2-PIECE BOOM

Boom: 5.65 m (18' 6") / Arm: 2.00 m (6' 7") / Bucket: 0.80 m³ (1.05yd³) SAE heaped / Shoe: 600mm(24") triple grouser

Load point height m (ft)		Load radius								At max. reach		
		3.0 m (10 ft)		4.5 m (15 ft)		6.0 m (20 ft)		7.5 m (25 ft)		Capacity		Reach
												m (ft)
9.0 m	kg									*6750	*6750	4.51
(30 ft)	lb									*14880	*14880	(14.8)
7.5 m	kg	*8110	*8110	*6850	*6850					*5200	4700	6.58
(25 ft)	lb	*17880	*17880	*15100	*15100					*11460	10360	(21.6)
6.0 m	kg	*8460	*8460	*6960	*6960	*5740	5390			*4630	3470	7.72
(20 ft)	lb	*18650	*18650	*15340	*15340	*12650	11880			*10210	7650	(25.3)
4.5 m	kg	*11210	*11210	*7620	*7620	*5920	5230			*4270	2920	8.37
(15 ft)	lb	*24710	*24710	*16800	*16800	*13050	11530			*9410	6440	(27.5)
3.0 m	kg			*8430	7790	*6190	4950	*4850	3410	*3960	2670	8.68
(10 ft)	lb			*18580	17170	*13650	10910	*10690	7520	*8730	5890	(28.5)
1.5 m	kg			*8660	7230	*6260	4690	*4710	3300	*3610	2620	8.68
(5 ft)	lb			*19090	15940	*13800	10340	*10380	7280	7960	5780	(28.5)
Ground	kg			*7950	6980	*5880	4520	*4200	3230	*3130	2770	8.37
Line	lb			*17530	15390	*12960	9960	*9260	7120	*6900	6110	(27.5)
-1.5 m	kg	*7060	*7060	*6470	*6470	*4870	4480			*2330	*2330	7.71
(-5 ft)	lb	*15560	*15560	*14260	*14260	*10740	9880			*5140	*5140	(25.3)
-3.0 m	kg			*4140	*4140	*2800	*2800					
(-10 ft)	lb			*9130	*9130	*6170	*6170					

1. Lifting capacity are based on ISO 10567.
2. Lifting capacity of the ROBEX series does not exceed 75% of tipping load with the machine on firm, level ground or 87% of full hydraulic capacity.
3. The load point is a hook (standard equipment) located on the back of the bucket.
4. (*) indicates load limited by hydraulic capacity.

Rating over-front | Rating over-side or 360 degree

HX235LCR 2-PIECE BOOM

Boom: 5.65 m (18' 6") / Arm: 2.00 m (6' 7") / Bucket: 0.80 m³ (1.05yd³) SAE heaped / Shoe: 600mm(24") triple grouser

Load point height m (ft)		Load radius								At max. reach		
		3.0 m (10 ft)		4.5 m (15 ft)		6.0 m (20 ft)		7.5 m (25 ft)		Capacity		Reach
												m (ft)
9.0 m	kg									*6750	*6750	4.51
(30 ft)	lb									*14880	*14880	(14.8)
7.5 m	kg	*8110	*8110	*6850	*6850					*5200	4420	6.58
(25 ft)	lb	*17880	*17880	*15100	*15100					*11460	9740	(21.6)
6.0 m	kg	*8460	*8460	*6960	*6960	*5740	5060			*4630	3250	7.72
(20 ft)	lb	*18650	*18650	*15340	*15340	*12650	11160			*10210	7170	(25.3)
4.5 m	kg	*11210	*11210	*7620	*7620	*5920	4900			*4270	2720	8.37
(15 ft)	lb	*24710	*24710	*16800	*16800	*13050	10800			*9410	6000	(27.5)
3.0 m	kg			*8430	7250	*6190	4630	*4850	3180	*3960	2480	8.68
(10 ft)	lb			*18580	15980	*13650	10210	*10690	7010	*8730	5470	(28.5)
1.5 m	kg			*8660	6710	*6260	4370	*4710	3070	*3610	2440	8.68
(5 ft)	lb			*19090	14790	*13800	9630	*10380	6770	7960	5380	(28.5)
Ground	kg			*7950	6460	*5880	4200	*4200	3000	*3130	2580	8.37
Line	lb			*17530	14240	*12960	9260	*9260	6610	*6900	5690	(27.5)
-1.5 m	kg	*7060	*7060	*6470	6450	*4870	4160			*2330	*2330	7.71
(-5 ft)	lb	*15560	*15560	*14260	14220	*10740	9170			*5140	*5140	(25.3)
-3.0 m	kg			*4140	*4140	*2800	*2800					
(-10 ft)	lb			*9130	*9130	*6170	*6170					

Boom: 5.65 m (18' 6") / Arm: 2.40 m (7' 10") / Bucket: 0.80 m³ (1.05 yd³) SAE heaped / Shoe: 600mm(24") triple grouser

Load point height m (ft)		Load radius								At max. reach		
		3.0 m (10 ft)		4.5 m (15 ft)		6.0 m (20 ft)		7.5 m (25 ft)		Capacity		Reach
												m (ft)
9.0 m	kg	*5600	*5600							*5830	*5830	5.31
(30 ft)	lb	*12350	*12350							*12850	*12850	(17.4)
7.5 m	kg	*6240	*6240	*5830	*5830					*4760	4140	7.10
(25 ft)	lb	*13760	*13760	*12850	*12850					*10490	9130	(23.3)
6.0 m	kg	*6390	*6390	*6570	*6570	*5480	5480			*4290	3150	8.15
(20 ft)	lb	*14090	*14090	*14480	*14480	*12080	12080			*9460	6940	(26.7)
4.5 m	kg	*10370	*10370	*7270	*7270	*5720	5290	*4040	3540	*3980	2690	8.77
(15 ft)	lb	*22860	*22860	*16030	*16030	*12610	11660	*8910	7800	*8770	5930	(28.8)
3.0 m	kg			*8170	7920	*6050	5000	*4790	3430	*3720	2470	9.06
(10 ft)	lb			*18010	17460	*13340	11020	*10560	7560	*8200	5450	(29.7)
1.5 m	kg			*8620	7300	*6220	4700	*4740	3290	*3420	2420	9.06
(5 ft)	lb			*19000	16090	*13710	10360	*10450	7250	*7540	5340	(29.7)
Ground	kg	*8940	*8940	*8190	6970	*5980	4500	*4400	3190	*3010	2540	8.77
Line	lb	*19710	*19710	*18060	15370	*13180	9920	*9700	7030	*6640	5600	(28.8)
-1.5 m	kg	*8500	*8500	*6940	6890	*5160	4430			*2360	*2360	8.15
(-5 ft)	lb	*18740	*18740	*15300	15190	*11380	9770			*5200	*5200	(26.7)
-3.0 m	kg			*4860	*4860	*3490	*3490					
(-10 ft)	lb			*10710	*10710	*7690	*7690					

1. Lifting capacity are based on ISO 10567.
2. Lifting capacity of the ROBEX series does not exceed 75% of tipping load with the machine on firm, level ground or 87% of full hydraulic capacity.
3. The load point is a hook (standard equipment) located on the back of the bucket.
4. (*) indicates load limited by hydraulic capacity.

LIFTING CAPACITY

Rating over-front Rating over-side or 360 degree

HX235LCR 2-PIECE BOOM

Boom: 5.65 m (18' 6") / Arm: 2.40 m (7' 10") / Bucket: 0.80 m³ (1.05 yd³) SAE heaped / Shoe: 600mm(24") triple grouser

Load point height m (ft)		Load radius								At max. reach		
		3.0 m (10 ft)		4.5 m (15 ft)		6.0 m (20 ft)		7.5 m (25 ft)		Capacity		Reach
												m (ft)
9.0 m	kg	*5600	*5600							*5830	*5830	5.31
(30 ft)	lb	*12350	*12350							*12850	*12850	(17.4)
7.5 m	kg	*6240	*6240	*5830	*5830					*4760	3880	7.10
(25 ft)	lb	*13760	*13760	*12850	*12850					*10490	8550	(23.3)
6.0 m	kg	*6390	*6390	*6570	*6570	*5480	5140			*4290	2950	8.15
(20 ft)	lb	*14090	*14090	*14480	*14480	*12080	11330			*9460	6500	(26.7)
4.5 m	kg	*10370	*10370	*7270	*7270	*5720	4960	*4040	3310	*3980	2500	8.77
(15 ft)	lb	*22860	*22860	*16030	*16030	*12610	10930	*8910	7300	*8770	5510	(28.8)
3.0 m	kg			*8170	7380	*6050	4670	*4790	3200	*3720	2290	9.06
(10 ft)	lb			*18010	16270	*13340	10300	*10560	7050	*8200	5050	(29.7)
1.5 m	kg			*8620	6770	*6220	4380	*4740	3060	*3420	2240	9.06
(5 ft)	lb			*19000	14930	*13710	9660	*10450	6750	*7540	4940	(29.7)
Ground	kg	*8940	*8940	*8190	6450	*5980	4180	*4400	2960	*3010	2350	8.77
Line	lb	*19710	*19710	*18060	14220	*13180	9220	*9700	6530	*6640	5180	(28.8)
-1.5 m	kg	*8500	*8500	*6940	6370	*5160	4110			*2360	*2360	8.15
(-5 ft)	lb	*18740	*18740	*15300	14040	*11380	9060			*5200	*5200	(26.7)
-3.0 m	kg			*4860	*4860	*3490	*3490					
(-10 ft)	lb			*10710	*10710	*7690	*7690					

Boom: 5.65 m (18' 6") / Arm: 2.92 m (9' 7") / Bucket: 0.80 m³ (1.05 yd³) SAE heaped / Shoe: 600mm(24") triple grouser

Load point height m (ft)		Load radius								At max. reach		
		3.0 m (10 ft)		4.5 m (15 ft)		6.0 m (20 ft)		7.5 m (25 ft)		Capacity		Reach
												m (ft)
9.0 m	kg	*4950	*4950	*3120	*3120					*4630	*4630	6.19
(30 ft)	lb	*10910	*10910	*6880	*6880					*10210	*10210	(20.3)
7.5 m	kg			*4750	*4750	*3400	*3400			*4050	3560	7.75
(25 ft)	lb			*10470	*10470	*7500	*7500			*8930	7850	(25.4)
6.0 m	kg	*4760	*4760	*5190	*5190	*4840	*4840	*2180	*2180	*3820	2800	8.71
(20 ft)	lb	*10490	*10490	*11440	*11440	*10670	*10670	*4810	*4810	*8420	6170	(28.6)
4.5 m	kg	*6690	*6690	*6760	*6760	*5420	5370	*4250	3600	*3650	2410	9.29
(15 ft)	lb	*14750	*14750	*14900	*14900	*11950	11840	*9370	7640	*8050	5310	(30.5)
3.0 m	kg	*12100	*12100	*7760	*7760	*5820	5060	*4670	3450	*3430	2220	9.56
(10 ft)	lb	*26680	*26680	*17110	*17110	*12830	11160	*10300	7610	*7560	4890	(31.4)
1.5 m	kg	*9380	*9380	*8470	7400	*6110	4730	*4710	3290	*3180	2180	9.56
(5 ft)	lb	*20680	*20680	*18670	16310	*13470	10430	*10380	7250	*7010	4810	(31.4)
Ground	kg	*9730	*9730	*8370	6970	*6040	4480	*4520	3160	*2850	2270	9.29
Line	lb	*21450	*21450	*18450	15370	*13320	9880	*9960	6970	*6280	5000	(30.5)
-1.5 m	kg	*9980	*9980	*7420	6810	*5440	4360	*3890	3100	*2330	*2330	8.71
(-5 ft)	lb	*22000	*22000	*16360	15010	*11990	9610	*8580	6830	*5140	*5140	(28.6)
-3.0 m	kg	*7060	*7060	*5650	*5650	*4130	*4130					
(-10 ft)	lb	*15560	*15560	*12460	*12460	*9110	*9110					

1. Lifting capacity are based on ISO 10567.
2. Lifting capacity of the ROBEX series does not exceed 75% of tipping load with the machine on firm, level ground or 87% of full hydraulic capacity.
3. The load point is a hook (standard equipment) located on the back of the bucket.
4. (*) indicates load limited by hydraulic capacity.

Rating over-front Rating over-side or 360 degree

HX235LCR 2-PIECE BOOM

Boom: 5.65 m (18' 6") / Arm: 2.92 m (9' 7") / Bucket: 0.80 m³ (1.05 yd³) SAE heaped / Shoe: 600mm(24") triple grouser

Load point height m (ft)		Load radius								At max. reach		
		3.0 m (10 ft)		4.5 m (15 ft)		6.0 m (20 ft)		7.5 m (25 ft)		Capacity		Reach
												m (ft)
9.0 m	kg	*4950	*4950	*3120	*3120					*4630	*4630	6.19
(30 ft)	lb	*10910	*10910	*6880	*6880					*10210	*10210	(20.3)
7.5 m	kg			*4750	*4750	*3400	*3400			*4050	3340	7.75
(25 ft)	lb			*10470	*10470	*7500	*7500			*8930	7360	(25.4)
6.0 m	kg	*4760	*4760	*5190	*5190	*4840	*4840	*2180	*2180	*3820	2610	8.71
(20 ft)	lb	*10490	*10490	*11440	*11440	*10670	*10670	*4810	*4810	*8420	5750	(28.6)
4.5 m	kg	*6690	*6690	*6760	*6760	*5420	5040	*4250	3360	*3650	2240	9.29
(15 ft)	lb	*14750	*14750	*14900	*14900	*11950	11110	*9370	7410	*8050	4940	(30.5)
3.0 m	kg	*12100	*12100	*7760	7560	*5820	4730	*4670	3220	*3430	2060	9.56
(10 ft)	lb	*26680	*26680	*17110	16670	*12830	10430	*10300	7100	*7560	4540	(31.4)
1.5 m	kg	*9380	*9380	*8470	6870	*6110	4400	*4710	3060	*3180	2010	9.56
(5 ft)	lb	*20680	*20680	*18670	15150	*13470	9700	*10380	6750	*7010	4430	(31.4)
Ground	kg	*9730	*9730	*8370	6450	*6040	4160	*4520	2930	*2850	2100	9.29
Line	lb	*21450	*21450	*18450	14220	*13320	9170	*9960	6460	*6280	4630	(30.5)
-1.5 m	kg	*9980	*9980	*7420	6290	*5440	4040	*3890	2870	*2330	*2330	8.71
(-5 ft)	lb	*22000	*22000	*16360	13870	*11990	8910	*8580	6330	*5140	*5140	(28.6)
-3.0 m	kg	*7060	*7060	*5650	*5650	*4130	4050					
(-10 ft)	lb	*15560	*15560	*12460	*12460	*9110	8930					

1. Lifting capacity are based on ISO 10567.
2. Lifting capacity of the ROBEX series does not exceed 75% of tipping load with the machine on firm, level ground or 87% of full hydraulic capacity.
3. The load point is a hook (standard equipment) located on the back of the bucket.
4. (*) indicates load limited by hydraulic capacity.